Revision History				
Rev	ECN #	Approved Date	Approved by	Notes
N/A	N/A	N/A	N/A	N/A

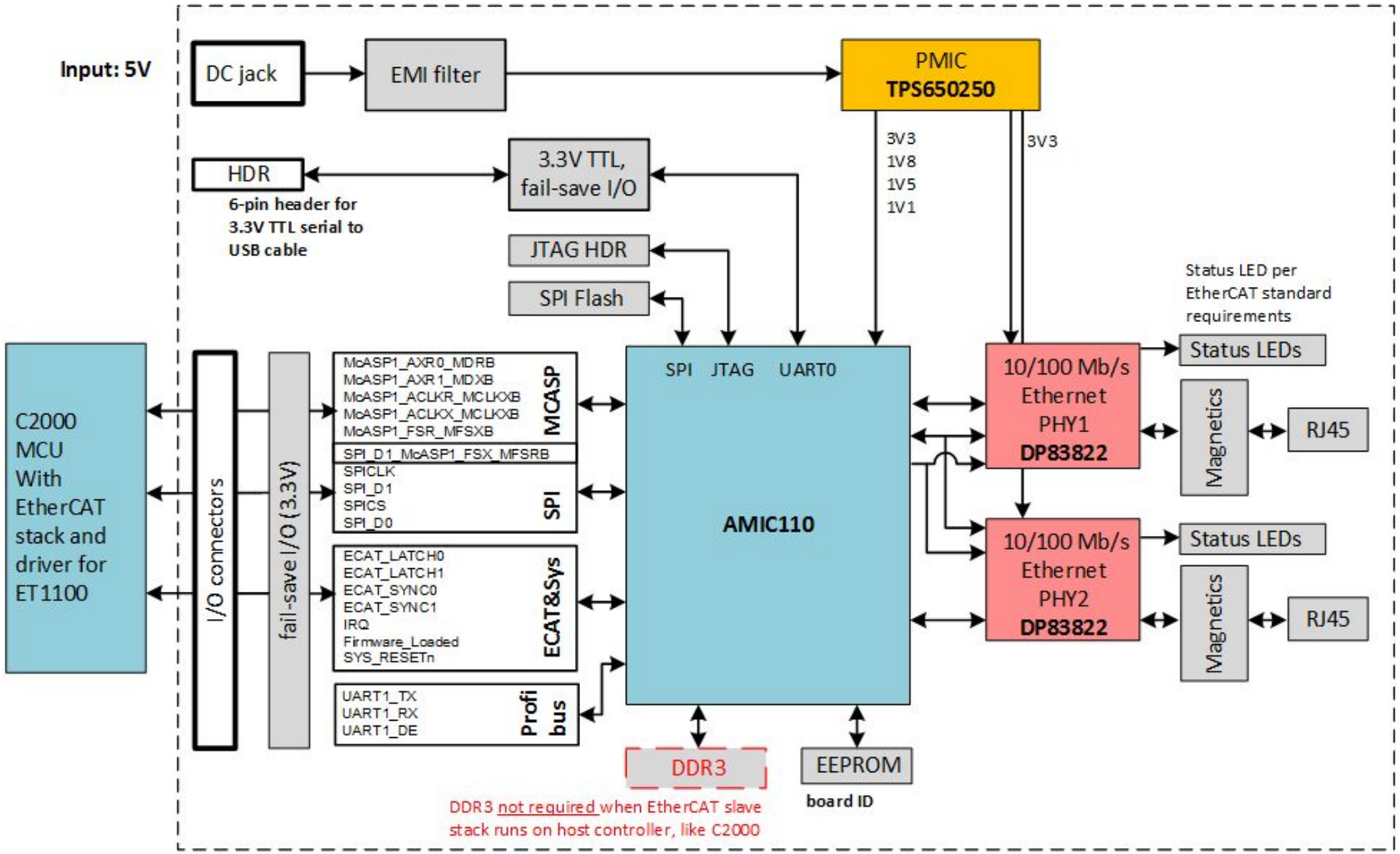

The TIDA-00299 design is the same hardware as the TMDXICE110-BTA

Texas Instruments and/or its licensors do not warrant the accuracy or completeness of this specification or any information contained therein. Texas Instruments and/or its licensors do not warrant that this design will meet the specifications, will be suitable for your application or fit for any particular purpose, or will operate in an implementation. Texas Instruments and/or its licensors do not warrant that the design is production worthy. You should completely validate and test your design implementation to confirm the system functionality for your application.

Orderable: N/A	Designed for: Public Release	Mod. Date: 3/27/2017
TID #: TIDA-00299	Project Title: Cost Optimized Robust EtherCAT Slave and Multi-Protocol Industrial Ethernet Reference Design	
Number: TIDA-00299 Rev: E2		
SVN Rev: Version control disabled	Assembly Variant: 001	Sheet: 1 of 1
Drawn By: K. Mogensen	File: AMIC110 ICE EVM_CS.SchDoc	Size: B
Engineer: Mogensen/Staebler	Contact: http://www.ti.com/support	

Texas Instruments
http://www.ti.com
© Texas Instruments 2017

H1
1
NY PMS 440 0025 PH

H2
1
NY PMS 440 0025 PH

DNP FID1
DNP FID2
DNP FID3
FID4
FID5
FID6

PCB LOGO
Pb-Free Symbol

PCB LOGO
FCC disclaimer

PCB LOGO
ESD Susceptible

PCB LOGO
ESD Susceptible

Variant/Label Table	
Variant	Label Text
001	All Populated
002	DNP option

LBL1
PCB Label
Size: 0.65" x 0.20 "

ZZ1
Label Assembly Note
This Assembly Note is for PCB labels only

ZZ2
Assembly Note
These assemblies are ESD sensitive, ESD precautions shall be observed.

ZZ3
Assembly Note
These assemblies must be clean and free from flux and all contaminants. Use of no clean flux is not acceptable.

ZZ4
Assembly Note
These assemblies must comply with workmanship standards IPC-A-610 Class 2, unless otherwise specified.

Texas Instruments and/or its licensors do not warrant the accuracy or completeness of this specification or any information contained therein. Texas Instruments and/or its licensors do not warrant that this design will meet the specifications, will be suitable for your application or fit for any particular purpose, or will operate in an implementation. Texas Instruments and/or its licensors do not warrant that the design is production worthy. You should completely validate and test your design implementation to confirm the system functionality for your application.

Orderable: N/A
Designed for: Public Release
Mod. Date: 3/29/2017
TID #: TIDA-00299
Project Title: Cost Optimized Robust EtherCAT Slave and Multi-Protocol Industrial Ethernet Reference Design
Number: TIDA-00299
Rev: E2
SVN Rev: Version control disabled
Assembly Variant: 001
Sheet: 2 of 1
Drawn By:
File: AMIC110 ICE EVM_HW.SchDoc
Size: B
Engineer: Mogensen/Staebler
Contact: http://www.ti.com/support
Texas Instruments
http://www.ti.com
© Texas Instruments 2017

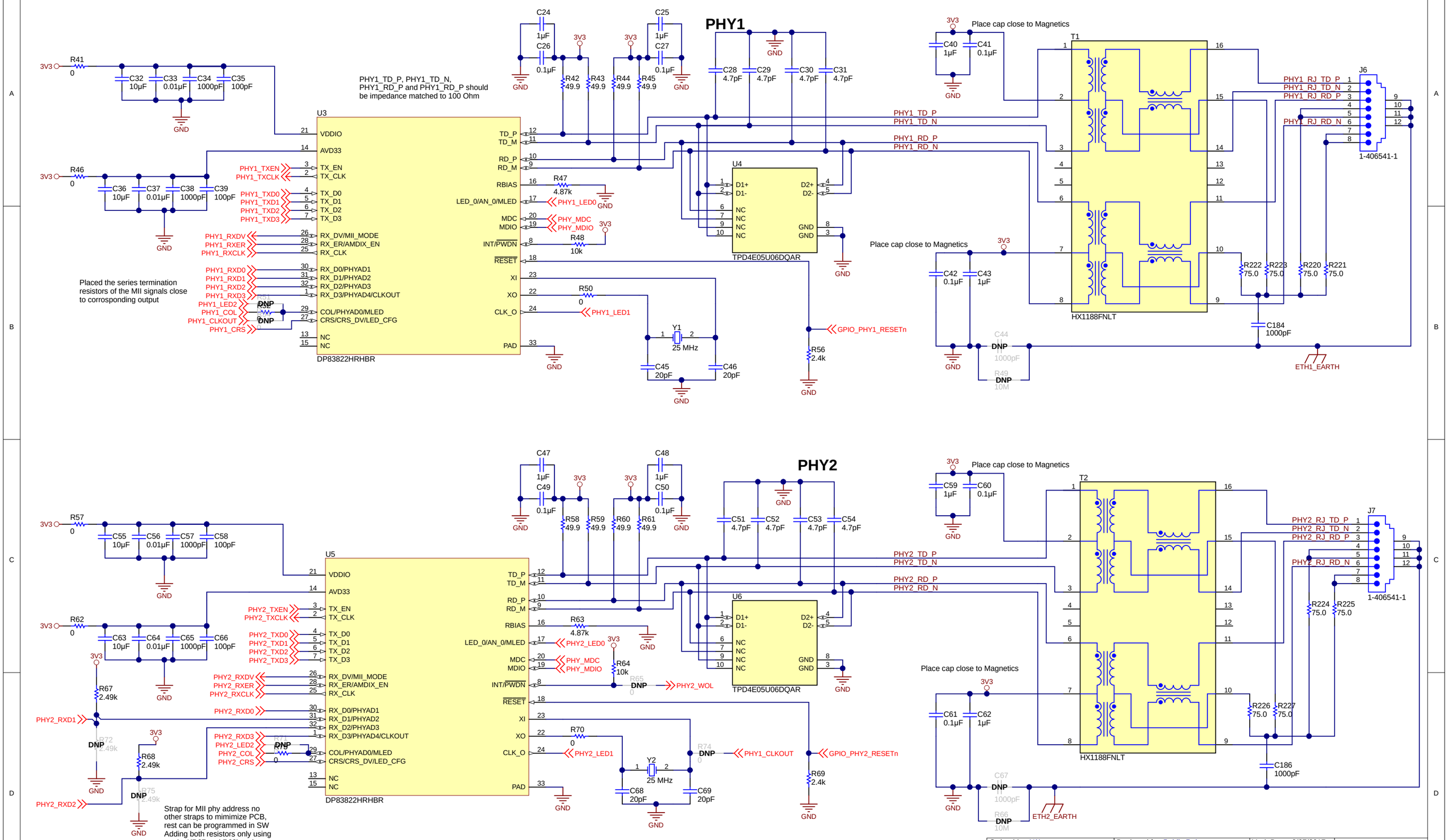

Orderable: N/A		Designed for: Public Release	Mod. Date: 3/27/2017
TID #: TIDA-00299		Project Title: Cost Optimized Robust EtherCAT Slave and Multi-Protocol Industrial Ethernet Reference Design	
Number: TIDA-00299	Rev: E2		
SVN Rev: Version control disabled		Assembly Variant: 001	Sheet: 3 of 1
Drawn By:		File: AMIC110 ICE EVM_PHY.SchDoc	Size: B
Engineer: Mogensen/Staebler		Contact: http://www.ti.com/support	

Texas Instruments

http://www.ti.com

© Texas Instruments 2017

Texas Instruments and/or its licensors do not warrant the accuracy or completeness of this specification or any information contained therein. Texas Instruments and/or its licensors do not warrant that this design will meet the specifications, will be suitable for your application or fit for any particular purpose, or will operate in an implementation. Texas Instruments and/or its licensors do not warrant that the design is production worthy. You should completely validate and test your design implementation to confirm the system functionality for your application.

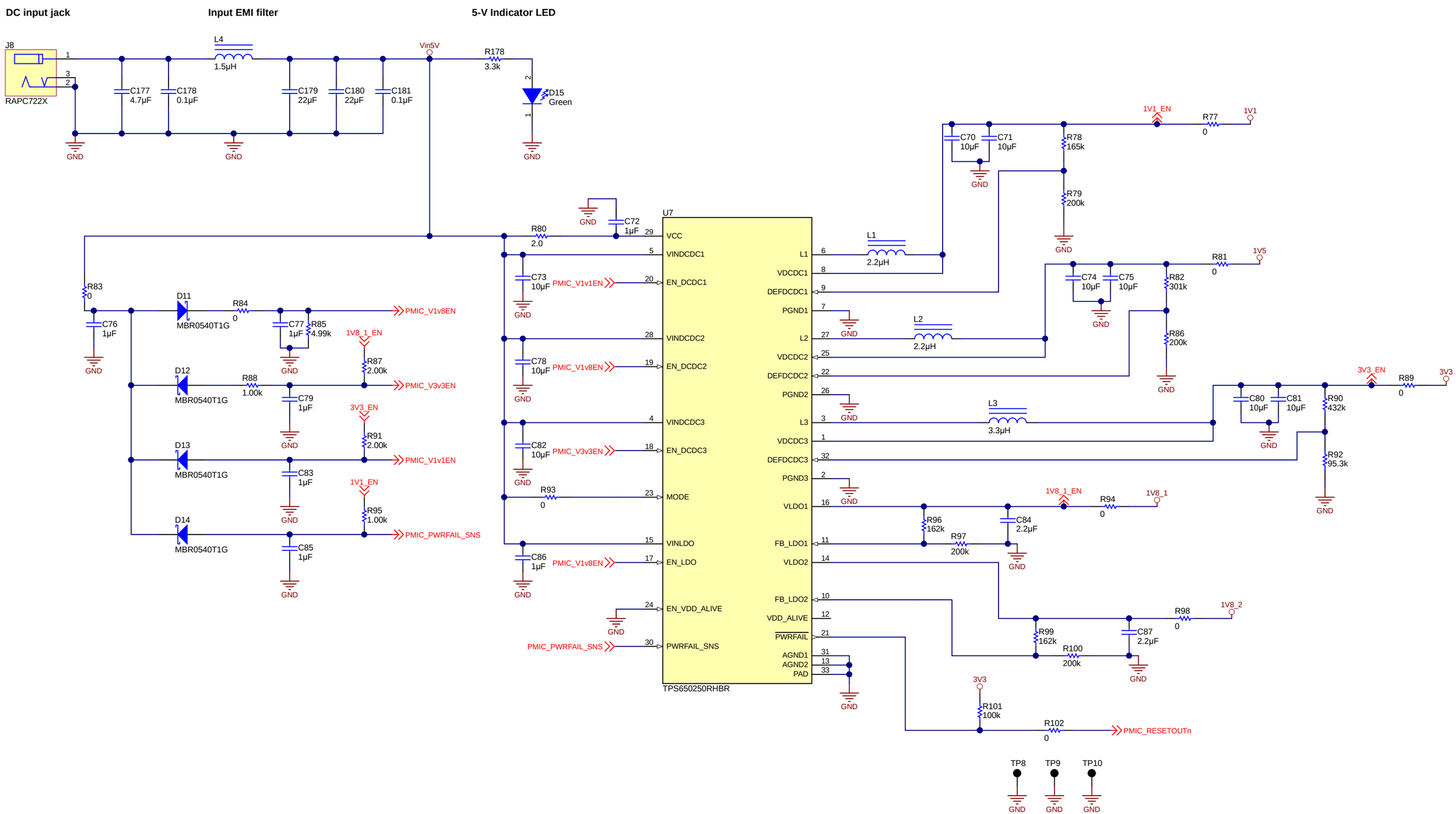

Orderable: N/A		Designed for: Public Release	Mod. Date: 3/27/2017
TID #: TIDA-00299		Project Title: Cost Optimized Robust EtherCAT Slave and Multi-Protocol Industrial Ethernet Reference Design	
Number: TIDA-00299	Rev: E2		
SVN Rev: Version control disabled		Assembly Variant: 001	Sheet: 4 of 1
Drawn By:		File: AMIC110 ICE EVM_Power.SchDoc	Size: B
Engineer: Mogensen/Staebler		Contact: http://www.ti.com/support	

TEXAS INSTRUMENTS
http://www.ti.com

Texas Instruments and/or its licensors do not warrant the accuracy or completeness of this specification or any information contained therein. Texas Instruments and/or its licensors do not warrant that this design will meet the specifications, will be suitable for your application or fit for any particular purpose, or will operate in an implementation. Texas Instruments and/or its licensors do not warrant that the design is production worthy. You should completely validate and test your design implementation to confirm the system functionality for your application.

© Texas Instruments 2017

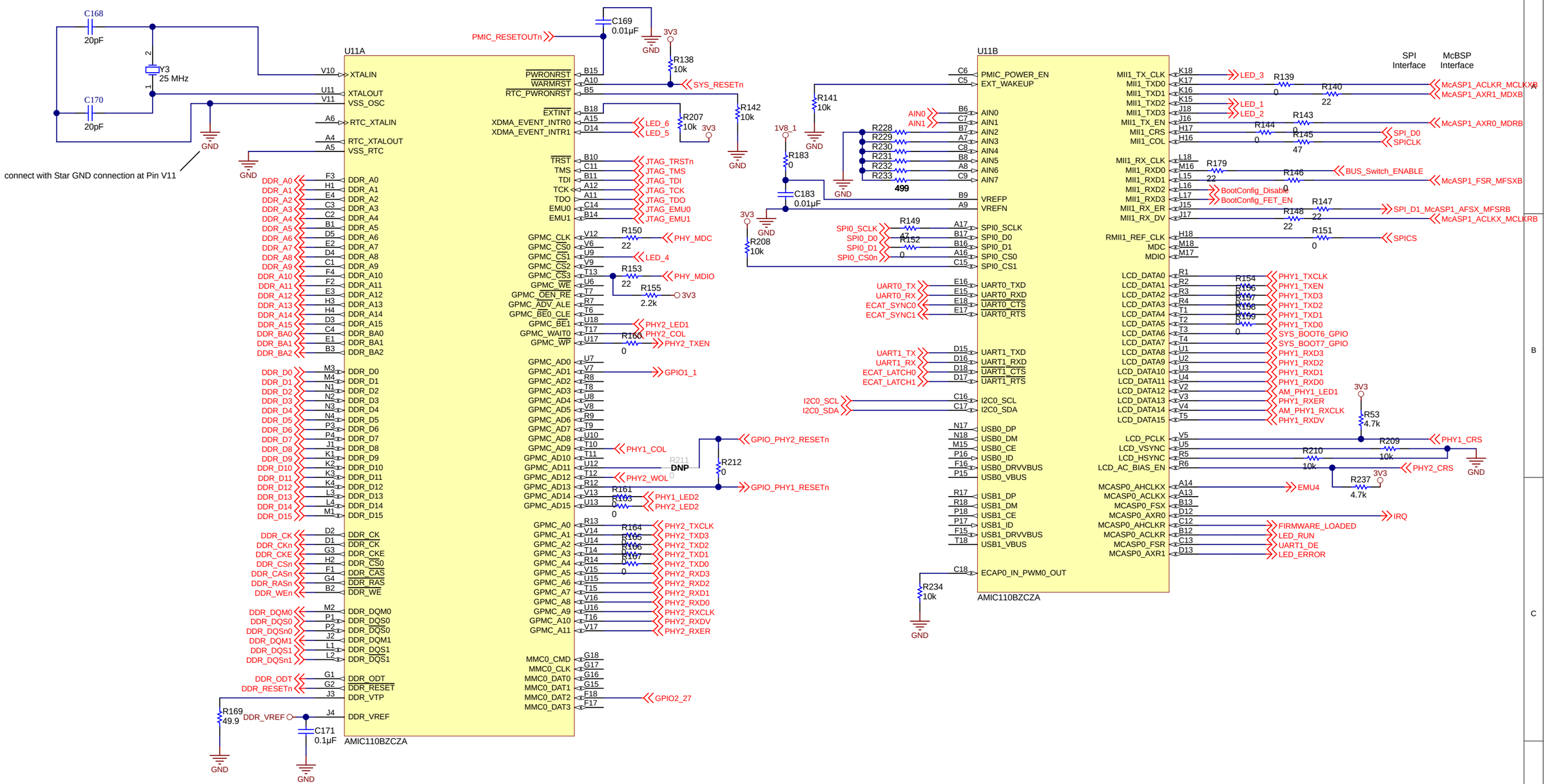

Orderable: N/A		Designed for: Public Release	Mod. Date: 3/27/2017
TID #: TIDA-00299		Project Title: Cost Optimized Robust EtherCAT Slave and Multi-Protocol Industrial Ethernet Reference Design	
Number: TIDA-00299	Rev: E2		
SVN Rev: Version control disabled		Assembly Variant: 001	Sheet: 5 of 1
Drawn By:		File: AMIC110 ICE EVM_SC_0.SchDoc	Size: B
Engineer: Mogensen/Staebler		Contact: http://www.ti.com/support	

Texas Instruments and/or its licensors do not warrant the accuracy or completeness of this specification or any information contained therein. Texas Instruments and/or its licensors do not warrant that this design will meet the specifications, will be suitable for your application or fit for any particular purpose, or will operate in an implementation. Texas Instruments and/or its licensors do not warrant that the design is production worthy. You should completely validate and test your design implementation to confirm the system functionality for your application.

Texas Instruments
http://www.ti.com
© Texas Instruments 2017

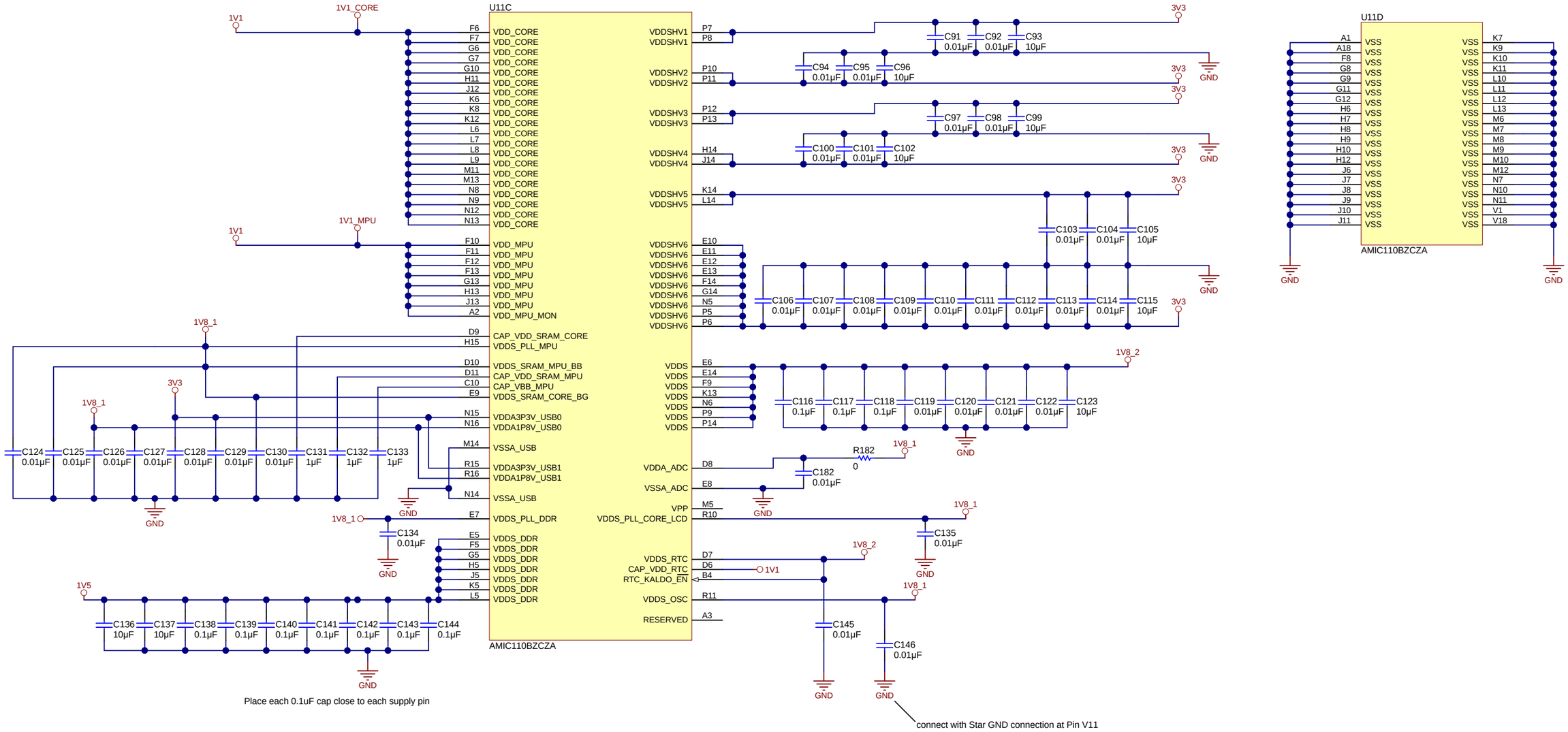

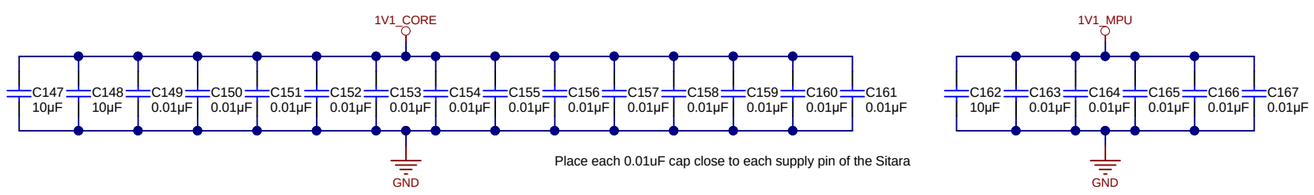

Orderable: N/A		Designed for: Public Release	Mod. Date: 3/27/2017
TID #: TIDA-00299		Project Title: Cost Optimized Robust EtherCAT Slave and Multi-Protocol Industrial Ethernet Reference Design	
Number: TIDA-00299	Rev: E2		
SVN Rev: Version control disabled		Assembly Variant: 001	Sheet: 6 of 1
Drawn By:		File: AMIC110 ICE EVM_PS.SchDoc	Size: B
Engineer: Mogensen/Staebler		Contact: http://www.ti.com/support	

Texas Instruments and/or its licensors do not warrant the accuracy or completeness of this specification or any information contained therein. Texas Instruments and/or its licensors do not warrant that this design will meet the specifications, will be suitable for your application or fit for any particular purpose, or will operate in an implementation. Texas Instruments and/or its licensors do not warrant that the design is production worthy. You should completely validate and test your design implementation to confirm the system functionality for your application.

Texas Instruments
http://www.ti.com
© Texas Instruments 2017

High Densitity Interface

McASP A and B not supported on interface

Please note due to symbol definition the connector pin assignment numbering is swapped vs the f28779d ControlCard connector

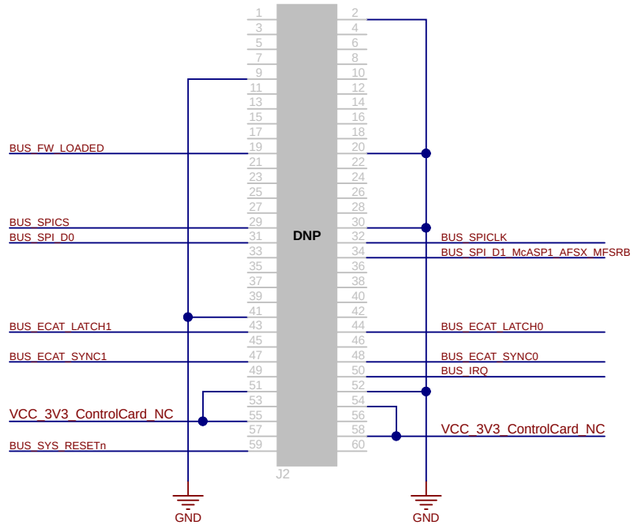

UART0 Serial Port for USB to 3.3V TTL Serial Cable

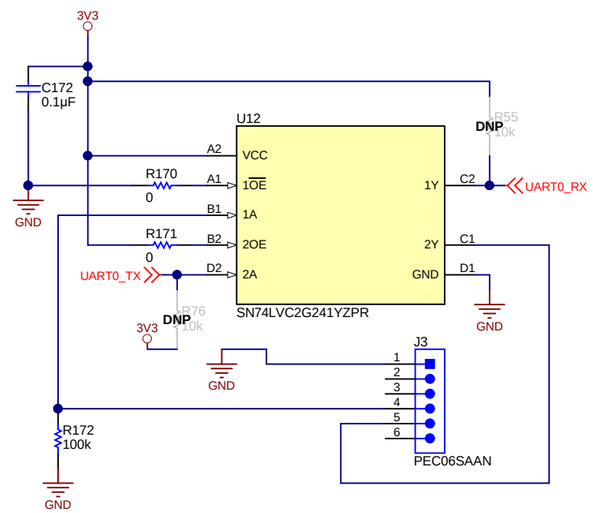

JTAG Interface

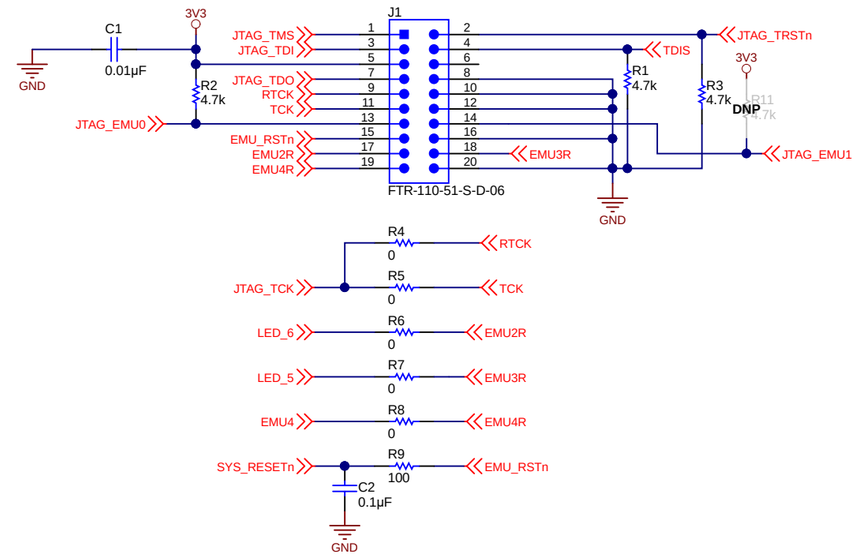

Manual System Reset

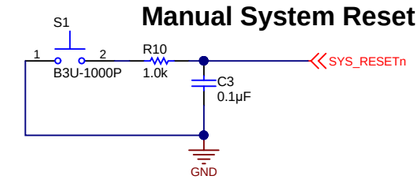

LaunchPad Interface

Jumper to supply LaunchPad

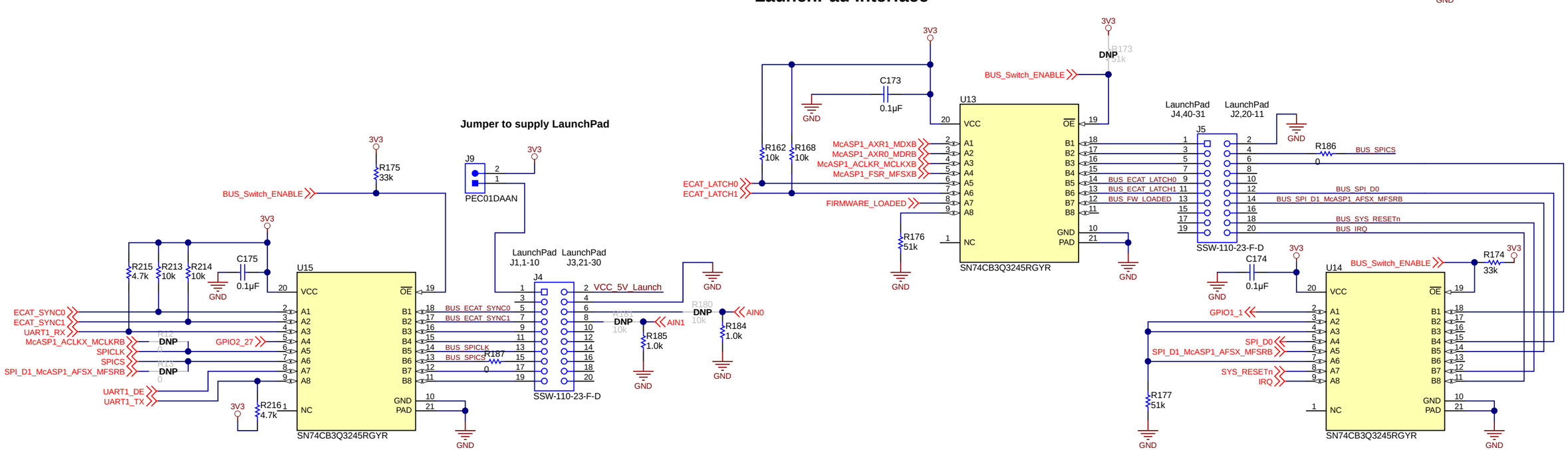

Texas Instruments and/or its licensors do not warrant the accuracy or completeness of this specification or any information contained therein. Texas Instruments and/or its licensors do not warrant that this design will meet the specifications, will be suitable for your application or fit for any particular purpose, or will operate in an implementation. Texas Instruments and/or its licensors do not warrant that the design is production worthy. You should completely validate and test your design implementation to confirm the system functionality for your application.

Orderable: N/A	Designed for: Public Release	Mod. Date: 4/5/2017
TID #: TIDA-00299	Project Title: Cost Optimized Robust EtherCAT Slave and Multi-Protocol Industrial Ethernet Reference Design	
Number: TIDA-00299 Rev: E2		
SVN Rev: Version control disabled	Assembly Variant: 001	Sheet: 7 of 1
Drawn By:	File: AMIC110 ICE EVM_Interfaces.SchDoc	Size: B
Engineer: Mogensen/Staebler	Contact: http://www.ti.com/support	

Texas Instruments
http://www.ti.com

© Texas Instruments 2017

Real Time Ethernet LEDs

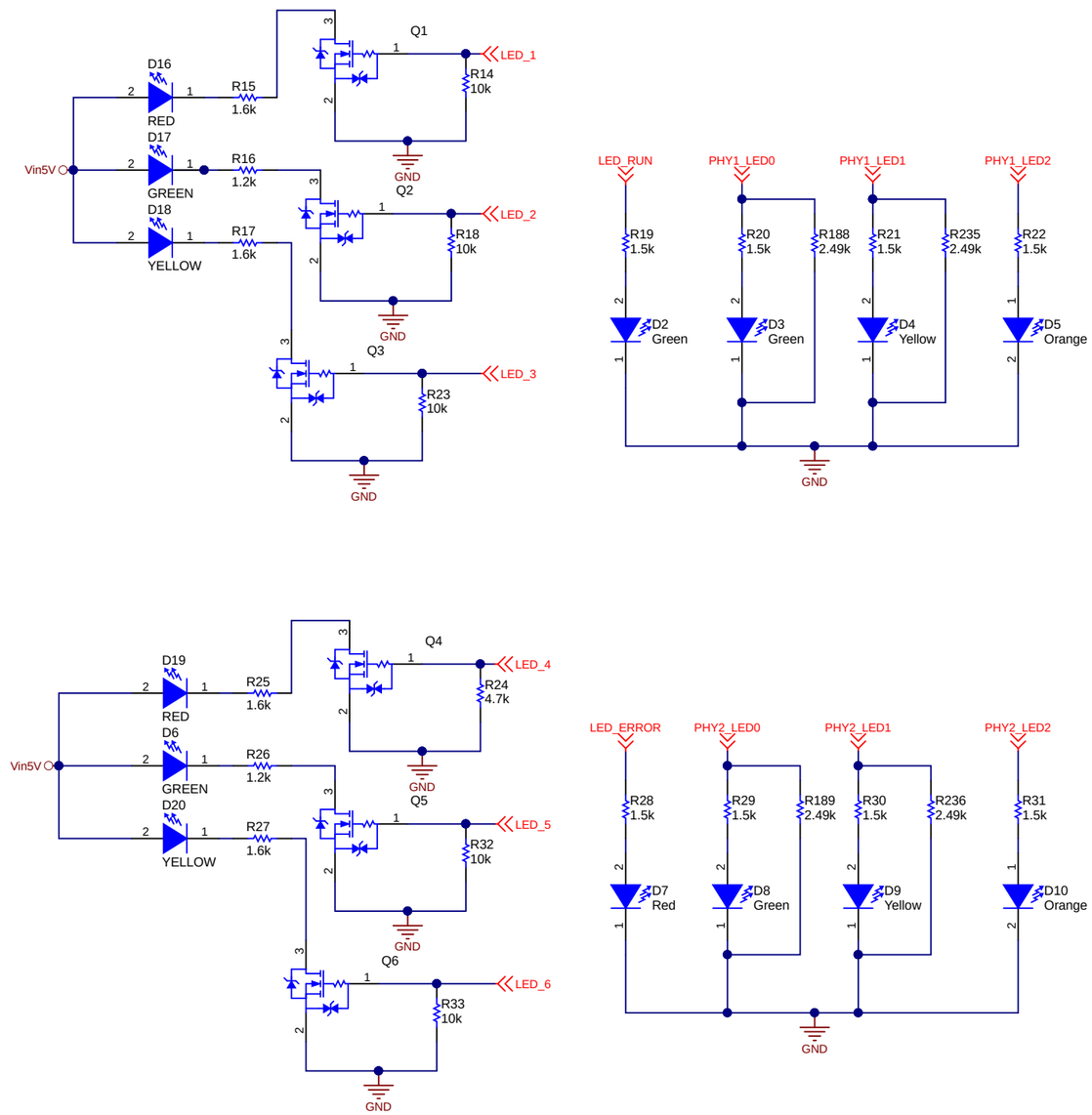

Texas Instruments and/or its licensors do not warrant the accuracy or completeness of this specification or any information contained therein. Texas Instruments and/or its licensors do not warrant that this design will meet the specifications, will be suitable for your application or fit for any particular purpose, or will operate in an implementation. Texas Instruments and/or its licensors do not warrant that the design is production worthy. You should completely validate and test your design implementation to confirm the system functionality for your application.

Orderable: N/A		Designed for: Public Release	Mod. Date: 3/27/2017
TID #: TIDA-00299		Project Title: Cost Optimized Robust EtherCAT Slave and Multi-Protocol Industrial Ethernet Reference Design	
Number: TIDA-00299	Rev: E2		
SVN Rev: Version control disabled		Assembly Variant: 001	Sheet: 8 of 1
Drawn By:		File: AMIC110 ICE EVM_Led.SchDoc	Size: B
Engineer: Mogensen/Staebler		Contact: http://www.ti.com/support	

Texas Instruments
http://www.ti.com

© Texas Instruments 2017

AM335x boot pin logic

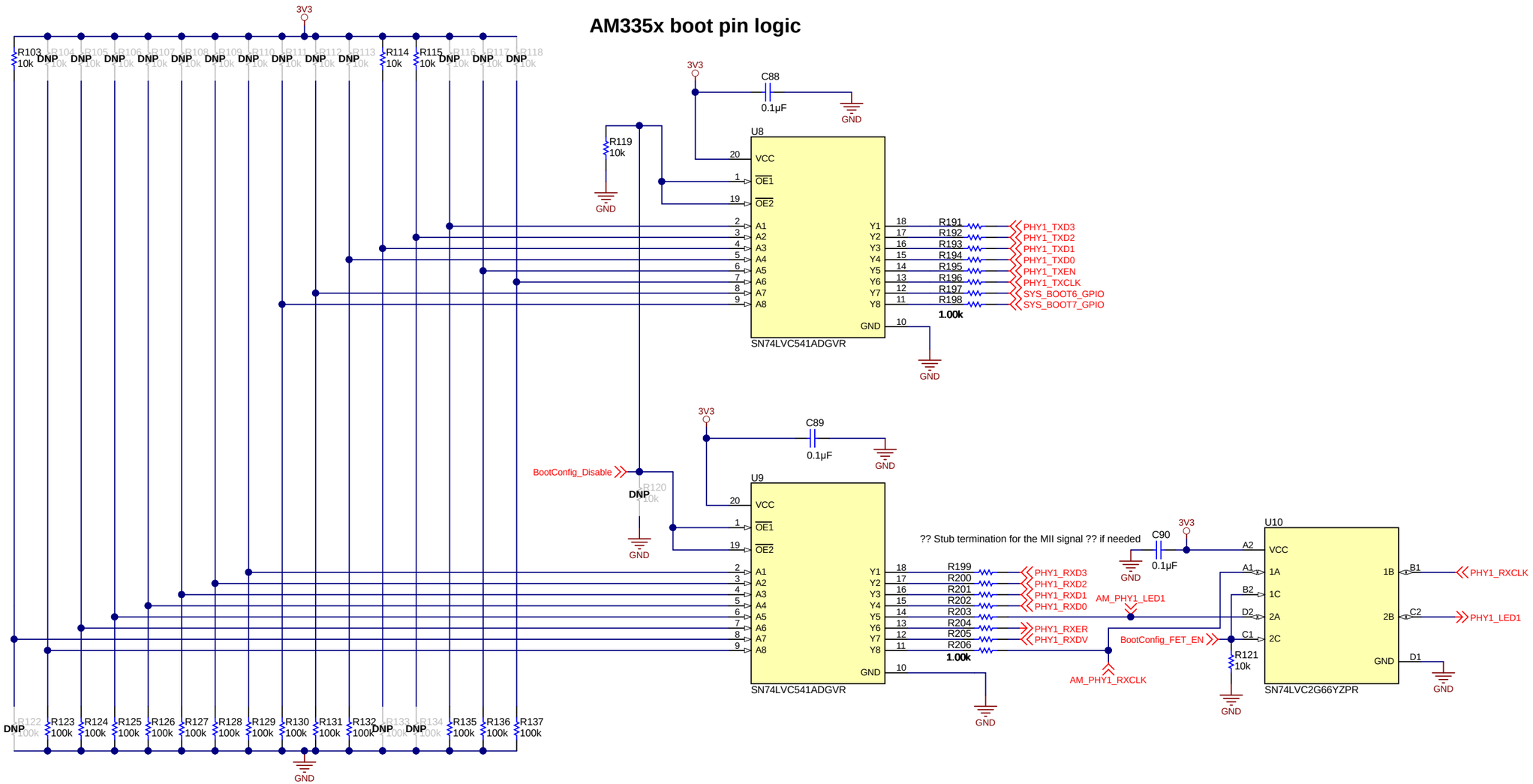

Orderable: N/A		Designed for: Public Release	Mod. Date: 3/27/2017
TID #: TIDA-00299		Project Title: Cost Optimized Robust EtherCAT Slave and Multi-Protocol Industrial Ethernet Reference Design	
Number: TIDA-00299	Rev: E2		
SVN Rev: Version control disabled		Assembly Variant: 001	Sheet: 9 of 1
Drawn By:		File: AMIC110 ICE EVM_BootConfig.SchDoc	Size: B
Engineer: Mogensen/Staebler		Contact: http://www.ti.com/support	

Texas Instruments and/or its licensors do not warrant the accuracy or completeness of this specification or any information contained therein. Texas Instruments and/or its licensors do not warrant that this design will meet the specifications, will be suitable for your application or fit for any particular purpose, or will operate in an implementation. Texas Instruments and/or its licensors do not warrant that the design is production worthy. You should completely validate and test your design implementation to confirm the system functionality for your application.

Texas Instruments
http://www.ti.com
© Texas Instruments 2017

DDR3 Interface

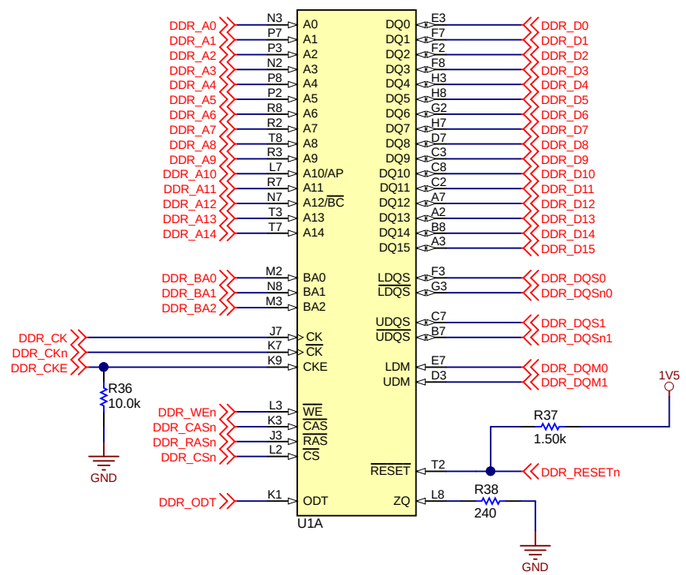

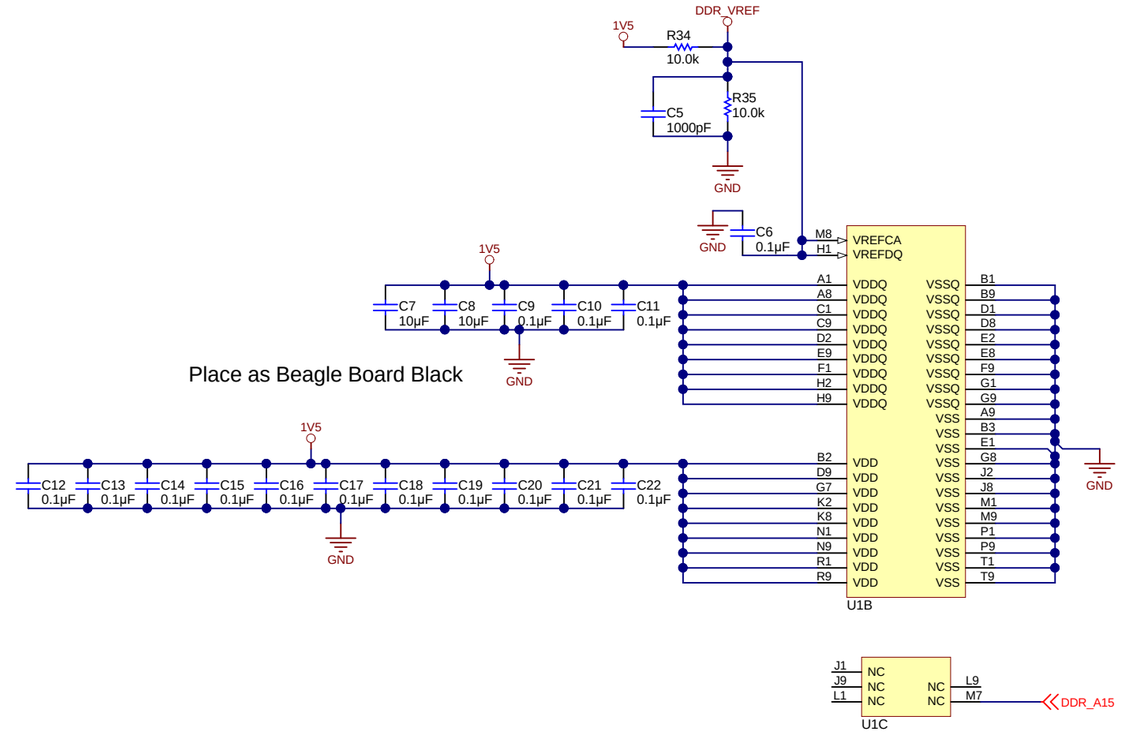

SPI Boot Flash

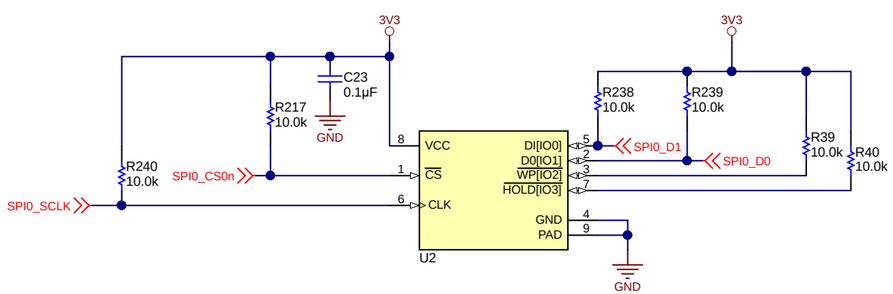

Board ID EEPROM

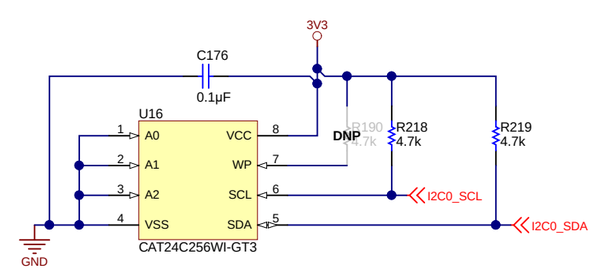

Texas Instruments and/or its licensors do not warrant the accuracy or completeness of this specification or any information contained therein. Texas Instruments and/or its licensors do not warrant that this design will meet the specifications, will be suitable for your application or fit for any particular purpose, or will operate in an implementation. Texas Instruments and/or its licensors do not warrant that the design is production worthy. You should completely validate and test your design implementation to confirm the system functionality for your application.

Orderable: N/A	Designed for: Public Release	Mod. Date: 3/27/2017
TID #: TIDA-00299	Project Title: Cost Optimized Robust EtherCAT Slave and Multi-Protocol Industrial Ethernet Reference Design	
Number: TIDA-00299 Rev: E2		
SVN Rev: Version control disabled	Assembly Variant: 001	Sheet: 10 of 1
Drawn By:	File: AMIC110 ICE EVM_Memory.SchDoc	Size: B
Engineer: Mogensen/Staebler	Contact: http://www.ti.com/support	

Texas Instruments
http://www.ti.com

© Texas Instruments 2017

IMPORTANT NOTICE FOR TI DESIGN INFORMATION AND RESOURCES

Texas Instruments Incorporated ('TI") technical, application or other design advice, services or information, including, but not limited to, reference designs and materials relating to evaluation modules, (collectively, "TI Resources") are intended to assist designers who are developing applications that incorporate TI products; by downloading, accessing or using any particular TI Resource in any way, you (individually or, if you are acting on behalf of a company, your company) agree to use it solely for this purpose and subject to the terms of this Notice.

TI's provision of TI Resources does not expand or otherwise alter TI's applicable published warranties or warranty disclaimers for TI products, and no additional obligations or liabilities arise from TI providing such TI Resources. TI reserves the right to make corrections, enhancements, improvements and other changes to its TI Resources.

You understand and agree that you remain responsible for using your independent analysis, evaluation and judgment in designing your applications and that you have full and exclusive responsibility to assure the safety of your applications and compliance of your applications (and of all TI products used in or for your applications) with all applicable regulations, laws and other applicable requirements. You represent that, with respect to your applications, you have all the necessary expertise to create and implement safeguards that (1) anticipate dangerous consequences of failures, (2) monitor failures and their consequences, and (3) lessen the likelihood of failures that might cause harm and take appropriate actions. You agree that prior to using or distributing any applications that include TI products, you will thoroughly test such applications and the functionality of such TI products as used in such applications. TI has not conducted any testing other than that specifically described in the published documentation for a particular TI Resource.

You are authorized to use, copy and modify any individual TI Resource only in connection with the development of applications that include the TI product(s) identified in such TI Resource. NO OTHER LICENSE, EXPRESS OR IMPLIED, BY ESTOPPEL OR OTHERWISE TO ANY OTHER TI INTELLECTUAL PROPERTY RIGHT, AND NO LICENSE TO ANY TECHNOLOGY OR INTELLECTUAL PROPERTY RIGHT OF TI OR ANY THIRD PARTY IS GRANTED HEREIN, including but not limited to any patent right, copyright, mask work right, or other intellectual property right relating to any combination, machine, or process in which TI products or services are used. Information regarding or referencing third-party products or services does not constitute a license to use such products or services, or a warranty or endorsement thereof. Use of TI Resources may require a license from a third party under the patents or other intellectual property of the third party, or a license from TI under the patents or other intellectual property of TI.

TI RESOURCES ARE PROVIDED "AS IS" AND WITH ALL FAULTS. TI DISCLAIMS ALL OTHER WARRANTIES OR REPRESENTATIONS, EXPRESS OR IMPLIED, REGARDING TI RESOURCES OR USE THEREOF, INCLUDING BUT NOT LIMITED TO ACCURACY OR COMPLETENESS, TITLE, ANY EPIDEMIC FAILURE WARRANTY AND ANY IMPLIED WARRANTIES OF MERCHANTABILITY, FITNESS FOR A PARTICULAR PURPOSE, AND NON-INFRINGEMENT OF ANY THIRD PARTY INTELLECTUAL PROPERTY RIGHTS.

TI SHALL NOT BE LIABLE FOR AND SHALL NOT DEFEND OR INDEMNIFY YOU AGAINST ANY CLAIM, INCLUDING BUT NOT LIMITED TO ANY INFRINGEMENT CLAIM THAT RELATES TO OR IS BASED ON ANY COMBINATION OF PRODUCTS EVEN IF DESCRIBED IN TI RESOURCES OR OTHERWISE. IN NO EVENT SHALL TI BE LIABLE FOR ANY ACTUAL, DIRECT, SPECIAL, COLLATERAL, INDIRECT, PUNITIVE, INCIDENTAL, CONSEQUENTIAL OR EXEMPLARY DAMAGES IN CONNECTION WITH OR ARISING OUT OF TI RESOURCES OR USE THEREOF, AND REGARDLESS OF WHETHER TI HAS BEEN ADVISED OF THE POSSIBILITY OF SUCH DAMAGES.

You agree to fully indemnify TI and its representatives against any damages, costs, losses, and/or liabilities arising out of your non-compliance with the terms and provisions of this Notice.

This Notice applies to TI Resources. Additional terms apply to the use and purchase of certain types of materials, TI products and services. These include; without limitation, TI's standard terms for semiconductor products http://www.ti.com/sc/docs/stdterms.htm), evaluation modules, and samples (http://www.ti.com/sc/docs/sampterms.htm).

Mailing Address: Texas Instruments, Post Office Box 655303, Dallas, Texas 75265
Copyright © 2017, Texas Instruments Incorporated